Overview

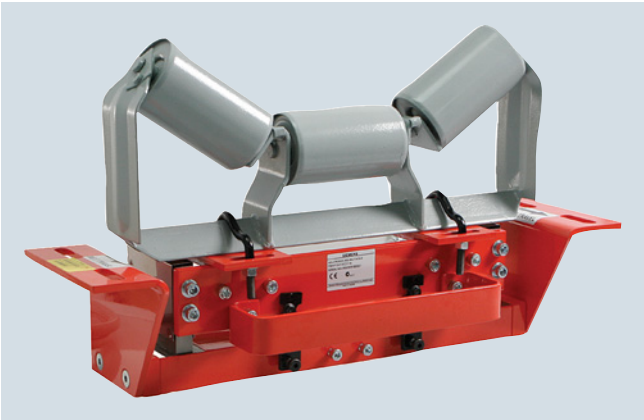

Milltronics MSI is a heavy-duty, high accuracy full-frame single idler belt scale used for process and load-out control.
Idler not included with belt scale.

Milltronics MMI is a heavy-duty, high accuracy multiple idler belt scale used for critical process and load-out control.
Idler not included with belt scale.

Benefits

Milltronics MSI belt scale

- Outstanding accuracy and repeatability
- Unique parallelogram style load cell design
- Fast reaction to product loading; capable of monitoring fast moving belts
- Rugged construction
- SABS approval (South Africa), OIML, MID, and Measurement Canada

Milltronics MMI belt scale

- Exceptional accuracy and repeatability
- Unique parallelogram style load cell design
- Suitable for uneven or light product loading
- Capable of monitoring fast moving belts
- Low cost of ownership
- NTEP, OIML, MID, and Measurement Canada approved

Application

Milltronics MSI belt scale

Milltronics MSI belt scale provides continuous in-line weighing on a variety of products in primary and secondary industries. It is proven in a wide range of tough applications from extraction (in mines, quarries and pits), to power generation, iron and steel, food processing and chemicals. The MSI is suitable for monitoring such diverse products as sand, flour, coal, or sugar.

The MSI's proven use of parallelogram-style load cells results in fast reaction to vertical forces, ensuring instant response to product loading. This enables it to provide outstanding accuracy and repeatability even with uneven loading and fast belt speeds.

Operating with Milltronics BW500, SIWAREX WT241, WP241, or FTC microprocessor-based integrators, the MSI provides indication of flow rate, totalized weight, belt load, and belt speed of bulk solid materials. A speed sensor monitors conveyor belt speed for input to the integrator.

The MSI is installed in a simple drop-in operation and may be secured with just four bolts. An existing idler is then attached to the MSI dynamic beam. With no moving parts, maintenance is kept to a minimum, with just periodic calibration checks required.

Milltronics MMI belt scale

Milltronics MMI belt scale consists of two or more MSI single idler belt scales installed in series. It provides high accuracy continuous in-line weighing on a variety of products in primary and secondary industries. The MMI system is proven in a wide range of tough applications from extraction to power generation, iron and steel, food processing and chemicals. The MMI is suitable for monitoring such diverse products as fertilizer, sand, grain, flour, coal, or sugar.

The MMI's proven use of parallelogram-style load cells results in fast reaction to vertical forces, ensuring instant response to product loading. This enables it to provide outstanding accuracy and repeatability even with uneven or light loading, short idler spacing and fast belt speeds. Operating with Milltronics BW500 integrator (for custody transfer applications), the MMI provides indication of flow rate, total weight, belt load and belt speed of bulk solids materials on a belt conveyor. A speed sensor monitors conveyor belt speed for input to the integrator.

The MMI is installed in a simple drop-in operation and may be secured with just eight bolts and existing idler sets, secured to the dynamic beam. With no moving parts, maintenance is kept to a minimum, with just periodic calibration checks required.

Design

Mounting

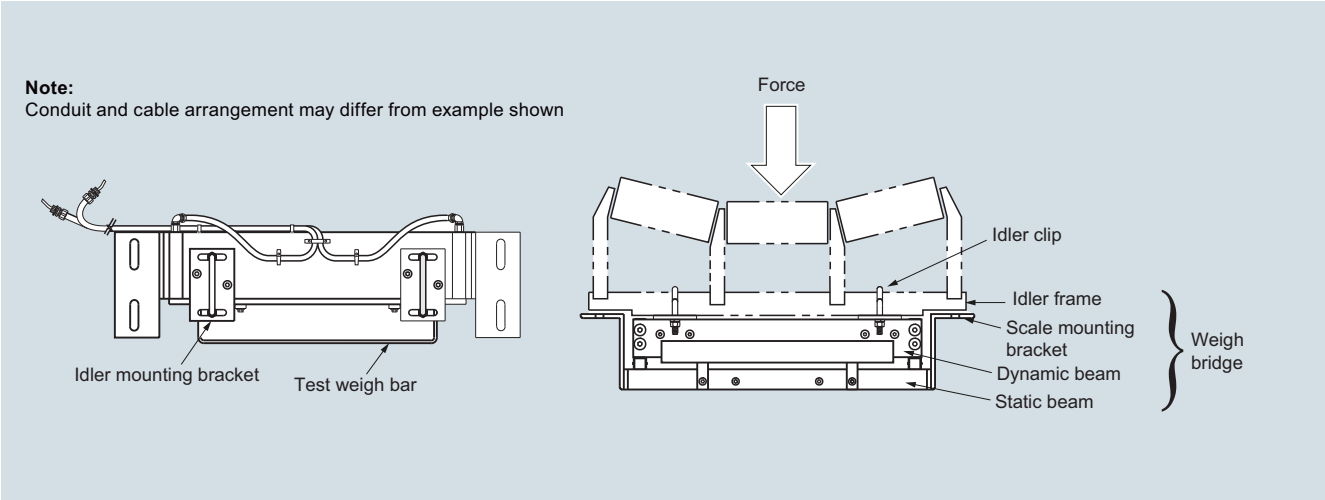

MSI/MMI mounting

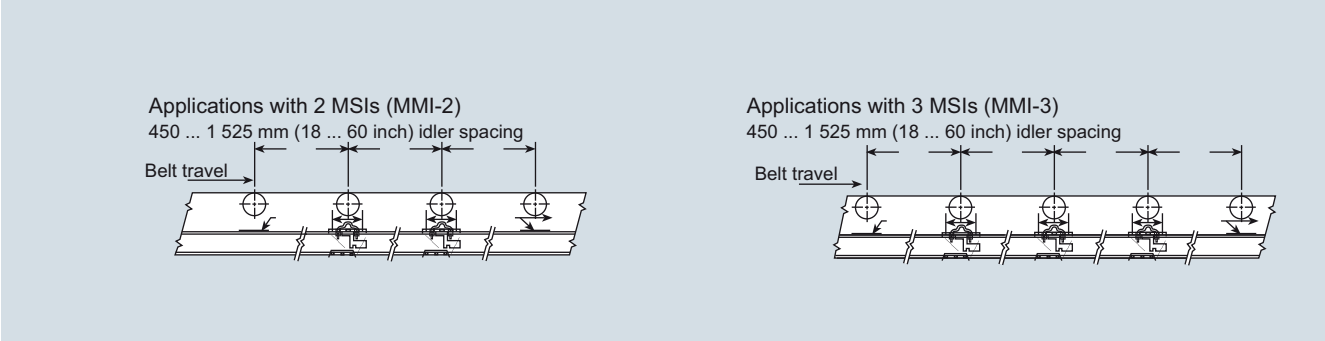

Mounting (two or more MSI units)

Technical specifications

Milltronics MSI/MMI	
Mode of operation	
Measuring principle	Strain gauge load cells measuring load on belt conveyor idler(s)
Typical application	
• MSI	Control in fractionated stone blending tunnels
• MMI	Custody transfer
Measurement accuracy	
Accuracy[1]	
• MSI	± 0.5 % or better of totalization over 20 … 100 % operating range
• MMI-2 (2 idler)	± 0.25 % or better of totalization over 20 … 100 % operating range
• MMI-3 (3 idler) Note: available with system specification option D only	± 0.125 % or better of totalization over 25 … 100 % operating range
• Repeatability	± 0.1 %
Medium conditions	
Material temperature	-50 … +175 °C (-58 … +347 °F)
Belt design	
Belt width	• 18 … 96 inch in CEMA sizes • Equivalent to 500 … 2 000 mm in metric size • Refer to dimensions section
Belt speed	Up to 5 m/s (1 000 fpm)[2]
Capacity	Up to 12 000 t/h (13 200 STPH) at maximum belt speed. Please contact a Siemens representative for higher rates.
Conveyor incline	• ± 20° from horizontal, fixed incline • Up to ± 30° with reduced accuracy[3]
Idlers	
Idler profile	• Flat to 35° • Up to 45° with reduced accuracy[3]
Idler diameter	50 … 180 mm (2 … 7 inch)
Idler spacing	0.5 … 1.5 m (1.5 … 5.0 ft)

Milltronics MSI/MMI	
Load cell	
Construction	Stainless steel construction with 304 (1.4301) stainless steel cover. Strain gauge protection: polybutadiene
Degree of protection	IP67, IP65 on hazardous approved models
Cable length	3 m (10 ft) Note: to calculate installation cable length subtract 3 048 mm (120 inch) from the "A" dimension
Excitation	10 V DC nominal, 15 V DC maximum
Output	2 ± 0.002 mV/V excitation (nominal) at rated load cell capacity
Non-linearity and hysteresis	0.02 % of rated output
Non-repeatability	0.01 % of rated output
Capacity	
• Maximum ranges	25, 50, 100, 250, 500, 750, 1 000, 1 250, 1 500, 2 000 lb
• Overload	150 % of rated capacity, ultimate 300 % of rated capacity
Temperature	• -50 … +75 °C (-58 … +167 °F) operating range • -40 … +65 °C (-40 … +150 °F) compensated • -10 ... +40 °C (14 ... 104 °F) compensated on trade approved versions
Weight	See dimensions section
Interconnection wiring (to integrator, per MSI)	• < 150 m (500 ft) 18 AWG (0.75 mm²) 6 conductor shielded cable • > 150 m … 300 m (500 ft … 1 000 ft) 18 … 22 AWG (0.75 … 0.34 mm²), 8 conductor shielded cable
Approvals	• CSA/FM Class II, Div. 1, Groups E, F, G and Class III • ATEX II 2D Ex tD A21 IP65 T90 °C • EAC Ex • IECEx Ex tD A21 IP65 T90 °C • CE, RCM, EAC, KCC, CMC, RTN
Metrology approvals	Measurement Canada, MID, OIML, SABS[4], NTEP[5], STAMEQ, GOST

[1] Accuracy subject to: on factory approved installations the belt scale system's totalized weight will be within the specified accuracy when compared to a known weighed material test sample.
The test rate must be within the specified range of the design capacity and held constant for the duration of the test.
The minimum material test sample must be equivalent to a sample obtained at the test flow rate for three revolutions of the belt or at least ten minutes running time, whichever is greater.

[2] Contact Siemens application engineering (factorysupport.smpi@siemens.com) for consideration of higher belt speeds.

[3] Review by Siemens application engineer required.

[4] MSI only.

[5] MMI only.

Selection and ordering data

		Article No.
Milltronics MSI belt scale ↗		**7MH7122-**
A heavy-duty, high-accuracy single idler belt scale for process and load-out control. For Milltronics MMI belt scale system, two or more MSI belt scales are required. Calibration weights are required and ordered as separate items.		
↗ Click on the Article No. for the online configuration in the PIA Life Cycle Portal.		
Scale construction		
Standard duty, CE, RCM, EAC, KCC	⬟	1
Hazardous Duty CSA/FM Class II, Div. 1, Groups E, F, G and Class III, ATEX II 2D, EAC Ex, IECEx, CE, RCM	⬟	2
Belt width and 'A' dimension		
18 inch, 'A' = 27 inch (686 mm)	⬟	AA
19 inch, 'A' = 28 inch (711 mm)	⬟	AB
20 inch, 'A' = 29 inch (737 mm)	⬟	AC
21 inch, 'A' = 30 inch (762 mm)	⬟	AD
22 inch, 'A' = 31 inch (787 mm)	⬟	AE
23 inch, 'A' = 32 inch (813 mm)	⬟	AF
24 inch, 'A' = 33 inch (838 mm)	⬟	AG
25 inch, 'A' = 34 inch (864 mm)	⬟	AH
26 inch, 'A' = 35 inch (889 mm)	⬟	AJ
27 inch, 'A' = 36 inch (914 mm)	⬟	AK
28 inch, 'A' = 37 inch (940 mm)	⬟	AL
29 inch, 'A' = 38 inch (965 mm)	⬟	AM
30 inch, 'A' = 39 inch (991 mm)	⬟	AN
31 inch, 'A' = 40 inch (1 016 mm)	⬟	AP
32 inch, 'A' = 41 inch (1 041 mm)	⬟	AQ
33 inch, 'A' = 42 inch (1 067 mm)	⬟	AR
34 inch, 'A' = 43 inch (1 092 mm)	⬟	AS
35 inch, 'A' = 44 inch (1 118 mm)	⬟	AT
36 inch, 'A' = 45 inch (1 143 mm)	⬟	AU
37 inch, 'A' = 46 inch (1 168 mm)	⬟	AV
38 inch, 'A' = 47 inch (1 194 mm)	⬟	AW
39 inch, 'A' = 48 inch (1 219 mm)	⬟	BA
40 inch, 'A' = 49 inch (1 245 mm)	⬟	BB
41 inch, 'A' = 50 inch (1 270 mm)	⬟	BC
42 inch, 'A' = 51 inch (1 295 mm)	⬟	BD
43 inch, 'A' = 52 inch (1 321 mm)	⬟	BE
44 inch, 'A' = 53 inch (1 346 mm)	⬟	BF
45 inch, 'A' = 54 inch (1 372 mm)	⬟	BG
46 inch, 'A' = 55 inch (1 397 mm)	⬟	BH
47 inch, 'A' = 56 inch (1 422 mm)	⬟	BJ
48 inch, 'A' = 57 inch (1 448 mm)	⬟	BK
49 inch, 'A' = 58 inch (1 473 mm)	⬟	BL
50 inch, 'A' = 59 inch (1 499 mm)	⬟	BM
51 inch, 'A' = 60 inch (1 524 mm)	⬟	BN
52 inch, 'A' = 61 inch (1 549 mm)	⬟	BP
53 inch, 'A' = 62 inch (1 575 mm)	⬟	BQ
54 inch, 'A' = 63 inch (1 600 mm)	⬟	BR
55 inch, 'A' = 64 inch (1 626 mm)		BS
56 inch, 'A' = 65 inch (1 651 mm)		BT
57 inch, 'A' = 66 inch (1 676 mm)		BU
58 inch, 'A' = 67 inch (1 702 mm)		BV

		Article No.
Milltronics MSI belt scale		**7MH7122-**
A heavy-duty, high-accuracy single idler belt scale for process and load-out control. For Milltronics MMI belt scale system, two or more MSI belt scales are required. Calibration weights are required and ordered as separate items.		
59 inch, 'A' = 68 inch (1 727 mm)		BW
60 inch, 'A' = 69 inch (1 753 mm)		CA
61 inch, 'A' = 70 inch (1 778 mm)		CB
62 inch, 'A' = 71 inch (1 803 mm)		CC
63 inch, 'A' = 72 inch (1 829 mm)		CD
64 inch, 'A' = 73 inch (1 854 mm)		CE
65 inch, 'A' = 74 inch (1 880 mm)		CF
66 inch, 'A' = 75 inch (1 905 mm)		CG
67 inch, 'A' = 76 inch (1 930 mm)		CH
68 inch, 'A' = 77 inch (1 956 mm)		CJ
69 inch, 'A' = 78 inch (1 981 mm)		CK
70 inch, 'A' = 79 inch (2 007 mm)		CL
71 inch, 'A' = 80 inch (2 032 mm)		CM
72 inch, 'A' = 81 inch (2 057 mm)		CN
73 inch, 'A' = 82 inch (2 083 mm)		CP
74 inch, 'A' = 83 inch (2 108 mm)		CQ
75 inch, 'A' = 84 inch (2 134 mm)		CR
76 inch, 'A' = 85 inch (2 159 mm)		CS
77 inch, 'A' = 86 inch (2 184 mm)		CT
78 inch, 'A' = 87 inch (2 210 mm)		CU
79 inch, 'A' = 88 inch (2 235 mm)		CV
80 inch, 'A' = 89 inch (2 261 mm)		CW
81 inch, 'A' = 90 inch (2 286 mm)		DA
82 inch, 'A' = 91 inch (2 311 mm)		DB
83 inch, 'A' = 92 inch (2 337 mm)		DC
84 inch, 'A' = 93 inch (2 362 mm)		DD
85 inch, 'A' = 94 inch (2 388 mm)		DE
86 inch, 'A' = 95 inch (2 413 mm)		DF
87 inch, 'A' = 96 inch (2 438 mm)		DG
88 inch, 'A' = 97 inch (2 464 mm)		DH
89 inch, 'A' = 98 inch (2 489 mm)		DJ
90 inch, 'A' = 99 inch (2 515 mm)		DK
91 inch, 'A' = 100 inch (2 540 mm)		DL
92 inch, 'A' = 101 inch (2 565 mm)		DM
93 inch, 'A' = 102 inch (2 591 mm)		DN
94 inch, 'A' = 103 inch (2 616 mm)		DP
95 inch, 'A' = 104 inch (2 642 mm)		DQ
96 inch, 'A' = 105 inch (2 667 mm)		DR
Load cell capacity		
Not specified[1)]	⬟	0
25 lb (11.3 kg)	⬟	9 L1A

Selection and ordering data

		Article No.					
Milltronics MSI belt scale		**7MH7122-**					
A heavy-duty, high-accuracy single idler belt scale for process and load-out control. For Milltronics MMI belt scale system, two or more MSI belt scales are required. Calibration weights are required and ordered as separate items.					-		
50 lb (22.7 kg)	⬟		1				
100 lb (45.4 kg)	⬟		2				
250 lb (113.4 kg)	⬟		3				
500 lb (226.8 kg)	⬟		4				
750 lb (340.2 kg)	⬟		5				
1 000 lb (453.6 kg)	⬟		6				
1 250 lb (567 kg)[2]	⬟		7				
1 500 lb (680.4 kg)[2]	⬟		8				
2 000 lb (907.2 kg)	⬟		9				L 1 B
Fabrication							
C5-M rated polyester painted mild steel	⬟			1	1		
Electro-galvanized mild steel:							
18 ... 29 inch (457.2 ... 736.6 mm)				1	2		
30 ... 41 inch (762 ... 1 041.4 mm)				1	3		
42 ... 53 inch (1 066.8 ... 1 346.2 mm)				1	4		
54 ... 65 inch (1 371.6 ... 1 651 mm)				1	5		
66 ... 77 inch (1 676.4 ... 1 955.8 mm)				1	6		
78 ... 89 inch (1 981.2 ... 2 260.6 mm)				1	7		
90 ... 96 inch (2 286 ... 2 438.4 mm)				1	8		
Stainless steel 304 (1.4301), bead blast finish (1 ... 6 µm, 40 ... 240 µin) for belt width scales:							
18 ... 29 inch (457.2 ... 736.6 mm)				2	1		
30 ... 41 inch (762 ... 1 041.4 mm)				2	2		
42 ... 53 inch (1 066.8 ... 1 346.2 mm)				2	3		
54 ... 65 inch (1 371.6 ... 1 651 mm)				2	4		
66 ... 77 inch (1 676.4 ... 1 955.8 mm)				2	5		
78 ... 89 inch (1 981.2 ... 2 260.6 mm)				2	6		
90 ... 96 inch (2 786 ... 2 438.4 mm)				2	7		
Stainless steel 316 (1.4401), bead blast finish (1 ... 6 µm, 40 ... 240 µin) for belt width scales:							
18 ... 29 inch (457.2 ... 736.6 mm)				3	1		
30 ... 41 inch (762 ... 1 041.4 mm)				3	2		
42 ... 53 inch (1 066.8 ... 1 346.2 mm)				3	3		
54 ... 65 inch (1 371.6 ... 1 651 mm)				3	4		
66 ... 77 inch (1 676.4 ... 1 955.8 mm)				3	5		
78 ... 89 inch (1 981.2 ... 2 260.6 mm)				3	6		
90 ... 96 inch (2 786 ... 2 438.4 mm)				3	7		
C5-M rated polyester painted mild steel (compatible with MWL or flat bar weight calibration system)	⬟			4	1		
Galvanized, for belt width scales: (compatible with MWL or flat bar weight system)							
18 ... 29 inch (457.2 ... 736.6 mm)				4	2		
30 ... 41 inch (762 ... 1 041.4 mm)				4	3		
42 ... 53 inch (1 066.8 ... 1 346.2 mm)				4	4		
54 ... 65 inch (1 371.6 ... 1 651 mm)				4	5		
66 ... 77 inch (1 676.4 ... 1 955.8 mm)				4	6		
78 ... 89 inch (1 981.2 ... 2 260.6 mm)				4	7		
90 ... 96 inch (2 786 ... 2 438.4 mm)				4	8		

		Article No.					
Milltronics MSI belt scale		**7MH7122-**					
A heavy-duty, high-accuracy single idler belt scale for process and load-out control. For Milltronics MMI belt scale system, two or more MSI belt scales are required. Calibration weights are required and ordered as separate items.					-		
System specification							
Standard MSI and MMI	⬟					A	
NTEP Certified MMI[3)4)5)]						B	
OIML/MID Certified[4)5)]						C	
MSI for MMI-3 ± 0.125 % accuracy[6)]						D	

Further designs		Order code
Please add "**-Z**" to article no. and specify order code(s).		
Stainless steel tag [69 x 38 mm (2.7 x 1.5 inch)], Measuring-point number / identification (max 27 characters), specify in plain text.	⬟	**Y15**
Application Eng. reference number (max. 15 characters), specify in plain text.	⬟	**Y31**
Manufacturer's test certificate: According to EN 10204-2.2	⬟	**C11**
Factory calibration certificate	⬟	**Y33**
OIML/MID approval additional nameplate (submit application data with order)[5)]		**Y77**
NTEP approval additional nameplate (submit application data with order)[5)]		**Y78**
Extended cable length (For spare part pricing and part number consult factory) Load cell with 15 m (49.2 ft) cable length [standard is 3 m (9.8 ft)]		**A08**
High temp load cell (For spare part pricing and part number consult factory) Load cell suitable for high temp up to 175 °C (347 °F) [standard is 75 °C (167 °F)][7)]		**T50**
Load cell with 316 (1.4401) cover (For spare part pricing and part number consult factory) Load cell cover is constructed from 316 (1.4401) stainless steel [standard is 304 (1.4301)]		**H53**
FDA compliant version Conduit and fittings designed for food applications conforming to FDA/USDA standards		**K01**

Operating instructions	Article No.
MSI Manuals	
• English	**7ML1998-5CY04**
• German	**A5E32007535**

Note: the operating instructions should be ordered as a separate item on the order.

All literature is available to download for free, in a range of languages, at
http://www.siemens.com/weighing/documentation

⬟ We can offer shorter delivery times for configurations designated with the Quick Ship Symbol ⬟

Selection and ordering data

	Article No.
Spare parts	
Flat bar/MWL retrofit kit	**7MH7723-1FW**
Conduit replacement kit	**7MH7723-1NA**
FDA conduit replacement kit	**7MH7723-1QL**
MWL calibration weight support brackets galvanized	**7MH7723-1JT**
Stainless steel load cells	
Standard load cell with 304 (1.4301) stainless steel cover	
50 lb (22.7 kg)	**7MH7725-1AC**
100 lb (45.4 kg)	**7MH7725-1AD**
250 lb (113.4 kg)	**7MH7725-1AE**
500 lb (226.8 kg)	**7MH7725-1AF**
750 lb (340.2 kg)	**7MH7725-1AG**
1 000 lb (453.6 kg)	**7MH7725-1AH**
1 250 lb (567 kg)	**7MH7725-1EA**
1 500 lb (680.4 kg)	**7MH7725-1EB**
100 lb (45.4 kg), NTEP, OIML/MID	**7MH7725-1DB**
250 lb (113.4 kg), NTEP, OIML/MID	**7MH7725-1DC**
500 lb (226.8 kg), NTEP, OIML/MID	**7MH7725-1DD**
750 lb (340.2 kg), NTEP, OIML/MID	**7MH7725-1DE**
1 000 lb (453.6 kg), NTEP, OIML/MID	**7MH7725-1DF**
50 lb (22.7 kg), CSA/FM/ATEX/IECEx	**7MH7725-1DT**
100 lb (45.4 kg), CSA/FM/ATEX/IECEx	**7MH7725-1DU**
250 lb (113.4 kg), CSA/FM/ATEX/IECEx	**7MH7725-1DV**
500 lb (226.8 kg), CSA/FM/ATEX/IECEx	**7MH7725-1DW**
750 lb (340.2 kg), CSA/FM/ATEX/IECEx	**7MH7725-1DX**
1 000 lb (453.6 kg), CSA/FM/ATEX/IECEx	**7MH7725-1DY**
1 250 lb (567 kg), CSA/FM/ATEX/IECEx	**7MH7725-1EE**
1 500 lb (680.4 kg), CSA/FM/ATEX/IECEx	**7MH7725-1EF**
Load cell with 316 (1.4401) stainless steel cover	
25 lb (11.3 kg)	**PBD-25851-A8H53**
50 lb (22.7 kg)	**PBD-25851-A0H53**
100 lb (45.4 kg)	**PBD-25851-A1H53**
250 lb (113.4 kg)	**PBD-25851-A2H53**
500 lb (226.8 kg)	**PBD-25851-A3H53**
750 lb (340.2 kg)	**PBD-25851-A4H53**
1 000 lb (453.6 kg)	**PBD-25851-A5H53**
1 250 lb (567 kg)	**PBD-25851-A6H53**
1 500 lb (680.4 kg)	**PBD-25851-A7H53**
2 000 lb (907.2 kg)	**PBD-25851-A9H53**

	Article No.
100 lb (45.4 kg), NTEP, OIML/MID	**PBD-25851-B1H53**
250 lb (113.4 kg), NTEP, OIML/MID	**PBD-25851-B2H53**
500 lb (226.8 kg), NTEP, OIML/MID	**PBD-25851-B3H53**
750 lb (340.2 kg), NTEP, OIML/MID	**PBD-25851-B4H53**
1 000 lb (453.6 kg), NTEP, OIML/MID	**PBD-25851-B5H53**
Load cell, high temperature up to 175 °C (347 °F)	
25 lb (11.3 kg)	**PBD-25851-A8T50**
50 lb (22.7 kg)	**PBD-25851-A0T50**
100 lb (45.4 kg)	**PBD-25851-A1T50**
250 lb (113.4 kg)	**PBD-25851-A2T50**
500 lb (226.8 kg)	**PBD-25851-A3T50**
750 lb (340.2 kg)	**PBD-25851-A4T50**
1 000 lb (453.6 kg)	**PBD-25851-A5T50**
1 250 lb (567 kg)	**PBD-25851-A6T50**
1 500 lb (680.4 kg)	**PBD-25851-A7T50**
2 000 lb (907.2 kg)	**PBD-25851-A9T50**
Load cell, high temperature up to 175 °C (347 °F) with 316 (1.4401) stainless steel cover	
25 lb (11.3 kg)	**PBD-25851-A8TH**
50 lb (22.7 kg)	**PBD-25851-A0TH**
100 lb (45.4 kg)	**PBD-25851-A1TH**
250 lb (113.4 kg)	**PBD-25851-A2TH**
500 lb (226.8 kg)	**PBD-25851-A3TH**
750 lb (340.2 kg)	**PBD-25851-A4TH**
1 000 lb (453.6 kg)	**PBD-25851-A5TH**
1 250 lb (567 kg)	**PBD-25851-A6TH**
1 500 lb (680.4 kg)	**PBD-25851-A7TH**
2 000 lb (907.2 kg)	**PBH-25851-A9TH**
Load cell with 15 m (49.2 ft) cable length	
25 lb (11.3 kg)	**PBD-25851-A8A08**
50 lb (22.7 kg)	**PBD-25851-A0A08**
100 lb (45.4 kg)	**PBD-25851-A1A08**
250 lb (113.4 kg)	**PBD-25851-A2A08**
500 lb (226.8 kg)	**PBD-25851-A3A08**
750 lb (340.2 kg)	**PBD-25851-A4A08**
1 000 lb (453.6 kg)	**PBD-25851-A5A08**
1 250 lb (567 kg)	**PBD-25851-A6A08**
1 500 lb (680.4 kg)	**PBD-25851-A7A08**
2 000 lb (907.2 kg)	**PBD-25851-A9A08**
100 lb (45.4 kg), NTEP, OIML/MID	**PBD-25851-B1A08**
250 lb (113.4 kg), NTEP, OIML/MID	**PBD-25851-B2A08**
500 lb (226.8 kg), NTEP, OIML/MID	**PBD-25851-B3A08**
750 lb (340.2 kg), NTEP, OIML/MID	**PBD-25851-B4A08**
1 000 lb (45.4 kg), NTEP, OIML/MID	**PBD-25851-B5A08**
Load cell with 15 m (49.2 ft) cable length and 316 (1.4401) stainless steel cover	
25 lb (11.3 kg)	**PBD-25851-A8AH**
50 lb (22.7 kg)	**PBD-25851-A0AH**
100 lb (45.4 kg)	**PBD-25851-A1AH**
250 lb (113.4 kg)	**PBD-25851-A2AH**
500 lb (226.8 kg)	**PBD-25851-A3AH**
750 lb (340.2 kg)	**PBD-25851-A4AH**
1 000 lb (453.6 kg)	**PBD-25851-A5AH**

Selection and ordering data	Article No.
1 250 lb (567 kg)	**PBD-25851-A6AH**
1 500 lb (680.4 kg)	**PBD-25851-A7AH**
2 000 lb (907.2 kg)	**PBD-25851-A9AH**
100 lb (45.4 kg), NTEP, OIML/MID	**PBD-25851-B1AH**
250 lb (113.4 kg), NTEP, OIML/MID	**PBD-25851-B2AH**
500 lb (226.8 kg), NTEP, OIML/MID	**PBD-25851-B3AH**
750 lb (340.2 kg), NTEP, OIML/MID	**PBD-25851-B4AH**
1 000 lb (453.6 kg), NTEP, OIML/MID	**PBD-25851-B5AH**
Load cell, high temperature up to 175 °C (347 °F) with 15 m (49.2 ft) cable length	
25 lb (11.3 kg)	**PBD-25851-A8TA**
50 lb (22.7 kg)	**PBD-25851-A0TA**
100 lb (45.4 kg)	**PBD-25851-A1TA**
250 lb (113.4 kg)	**PBD-25851-A2TA**
500 lb (226.8 kg)	**PBD-25851-A3TA**
750 lb (340.2 kg)	**PBD-25851-A4TA**
1 000 lb (453.6 kg)	**PBD-25851-A5TA**
1 250 lb (567 kg)	**PBD-25851-A6TA**
1 500 lb (680.4 kg)	**PBD-25851-A7TA**
2 000 lb (907.2 kg)	**PBD-25851-A9TA**
Load cell, high temperature up to 175 °C (347 °F) with 15 m (49.2 ft) cable length and 316 (1.4401) stainless steel cover	
25 lb (11.3 kg)	**PBD-25851-A8AHT**
50 lb (22.7 kg)	**PBD-25851-A0AHT**
100 lb (45.4 kg)	**PBD-25851-A1AHT**
250 lb (113.4 kg)	**PBD-25851-A2AHT**
500 lb (226.8 kg)	**PBD-25851-A3AHT**
750 lb (340.2 kg)	**PBD-25851-A4AHT**
1 000 lb (453.6 kg)	**PBD-25851-A5AHT**
1 250 lb (567 kg)	**PBD-25851-A6AHT**
1 500 lb (680.4 kg)	**PBD-25851-A7AHT**
2 000 lb (907.2 kg)	**PBD-25851-A9AHT**
Idler clips	
5 inch (127 mm) for 27 ... 62 inch (686 ... 1 575 mm) "A" dimensions	**7MH7723-1BT**
7 inch (178 mm) for 63 ... 74 inch (1 600 ... 1 880 mm) "A" dimensions	**7MH7723-1DF**
Calibration weights	
6.0 lb/ 2.7 kg	**7MH7724-1AB**
18 lb/ 8.2 kg	**7MH7724-1AA**
18 lb/ 8.2 kg certified weight	**A5E32423812**
Milltronics flat bar calibration weights, see page 4/58	
Note: calibration accessories should be ordered as a separate line order	

⬟ We can offer shorter delivery times for configurations designated with the Quick Ship Symbol ⬟

1) Only for quotation purposes, not a valid ordering option.
2) Available with Fabrication options 11 ... 18 and 41 ... 48 only, and with System specification option A only.
3) Two MSI are required to make the NTEP approved MMI.
4) Approval available with load cell options 2 ... 6 only and applicable BW500.
5) Complete specification data sheet on page 4/3 and submit with order "legal for trade" version.
6) Includes metrological approved load cells.
7) Not available with construction option 2, or system specification options B, C, D.

Dimensional drawings

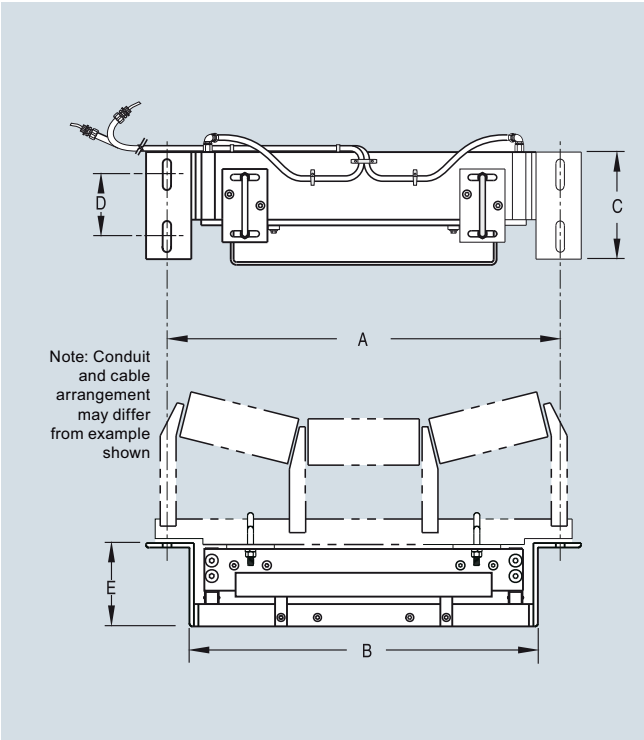

MSI dimensions

Conveyor belt width	Mounting scale width A	Minimum drop-in width B	C	D	E	Weight (approx.)
18 inch (457 mm)	27 inch (686 mm)	23.25 inch (591 mm)	9.5 inch (241 mm)	5.5 inch (140 mm)	7 inch (178 mm)	82 lb (37 kg)
20 inch (508 mm)	29 inch (737 mm)	25.25 inch (641 mm)	9.5 inch (241 mm)	5.5 inch (140 mm)	7 inch (178 mm)	85 lb (39 kg)
24 inch (610 mm)	33 inch (838 mm)	29.25 inch (743 mm)	9.5 inch (241 mm)	5.5 inch (140 mm)	7 inch (178 mm)	90 lb (41 kg)
30 inch (762 mm)	39 inch (991 mm)	35.25 inch (895 mm)	9.5 inch (241 mm)	5.5 inch (140 mm)	7 inch (178 mm)	99 lb (45 kg)
36 inch (914 mm)	45 inch (1 143 mm)	41.25 inch (1 048 mm)	9.5 inch (241 mm)	5.5 inch (140 mm)	7 inch (178 mm)	107 lb (49 kg)
42 inch (1 067 mm)	51 inch (1 295 mm)	47.25 inch (1 200 mm)	9.5 inch (241 mm)	5.5 inch (140 mm)	7 inch (178 mm)	116 lb (53 kg)
48 inch (1 219 mm)	57 inch (1 448 mm)	53.25 inch (1 353 mm)	9.5 inch (241 mm)	5.5 inch (140 mm)	7 inch (178 mm)	125 lb (57 kg)
54 inch (1 372 mm)	63 inch (1 600 mm)	59.25 inch (1 505 mm)	12 inch (305 mm)	8 inch (203 mm)	7 inch (178 mm)	175 lb (79 kg)
60 inch (1 524 mm)	69 inch (1 753 mm)	65.25 inch (1 657 mm)	12 inch (305 mm)	8 inch (203 mm)	7 inch (178 mm)	193 lb (88 kg)
66 inch (1 676 mm)	75 inch (1 905 mm)	71.25 inch (1 810 mm)	12 inch (305 mm)	8 inch (203 mm)	8 inch (203 mm)	229 lb (104 kg)
72 inch (1 829 mm)	81 inch (2 057 mm)	77.25 inch (1 962 mm)	12 inch (305 mm)	8 inch (203 mm)	8 inch (203 mm)	247 lb (112 kg)

Other widths available - check configuration information.
Sizes are from 18 inch (457 mm) to 96 inch (2 438 mm) in 1 inch (25.4 mm) increments. All sizes are nominal.

Note: dimension B must be approx. 3/8 inch or 10 mm less than Y dimension of the conveyor (see Application Questionnaire on page 4/3).

Schematics

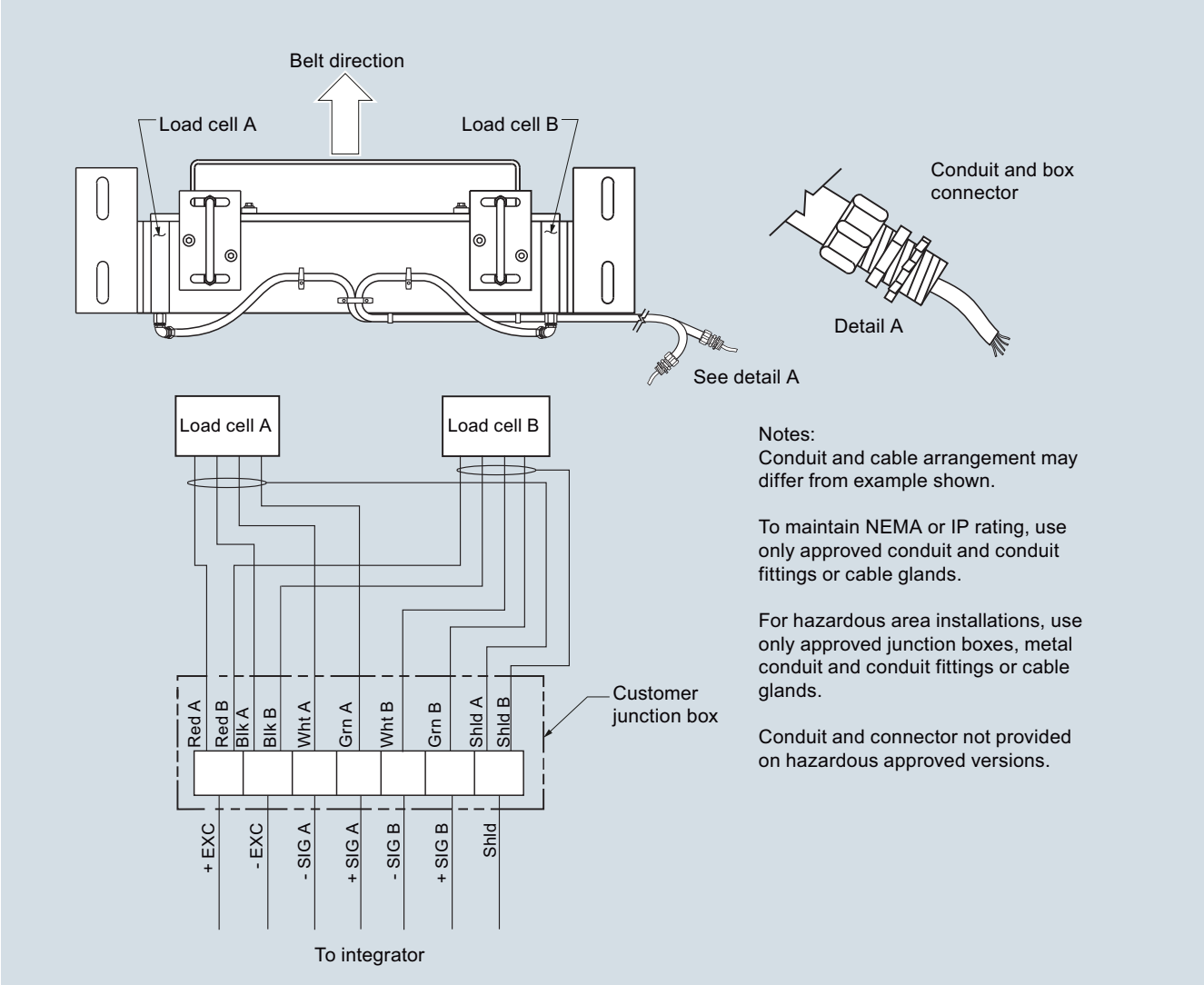

MSI/MMI connections

More information

NTEP/Measurement Canada/OIML & MID Specification Data

Please complete and submit the relevant details listed below when ordering NTEP, Measurement Canada, or OIML & MID approval options	Value
NTEP	
Maximum rated capacity (TPH)	
Minimum rated capacity (TPH)	
Belt speed (FPM)	
Scale division (tons)	
Maximum loading (lb/ft)	
Measurement Canada	
Rate	
Speed (min/max m/s, FPM)	
Test load (kg/m, lb/ft)	

Please complete and submit the relevant details listed below when ordering NTEP, Measurement Canada, or OIML & MID approval options	Value
OIML & MID	
Totalization scale interval (tonnes)	
Belt speed max/min (m/s)	
Maximum flow rate (MTPH)	
Minimum flow rate (MTPH)	
Minimum totalized load (tonnes)	
Product to be weighed	
Maximum capacity (tonnes)	
Weigh length (m)	
Ratio between minimum net load and maximum capacity	
Zero testing should have a duration of at least (____) revolutions	